Volvo Excavators 54.5-56.2 t 435 hp

EC550E

Volvo Construction Equipment

Welcome to our world

Welcome to a world of industry leading machinery. A world where imagination, hard work and technological innovation will lead the way towards developing a future which is cleaner, smarter, and more connected. A world supported by the enduring values of the Volvo Group. A world of stability, sustainability and innovation. A world which we put our customers at the heart of.

Welcome to the world of Volvo Construction Equipment – we think you're going to like it here.

Working harder, working smarter

For over 180 years Volvo has been a pioneer in the design and manufacture of machines which set the standard for efficiency, performance and uptime. Across our range of excavators, wheel loaders and haulers, our reputation for engineering excellence is unrivalled, which means whatever your operation or application, we can provide a total fleet solution to help you succeed.

Building on our proud history, the Volvo Concept Lab continues to create cutting-edge ideas and innovative concepts, to ensure we offer customers machines which work harder and smarter long into the future.

Solutions for you

Our industry leading machines are just the start of your relationship with Volvo. As your partner, we have developed an extensive range of additional solutions to help you improve uptime, boost productivity and reduce costs.

Designed for your business

Structured across nine blocks, our portfolio of products and services are designed to complement your machine's performance and boost your profitability. Simply put, we offer some of the best guarantees, warranties and technological solutions in the industry today.

There when you need us

Whether you're buying new or used, our global network of dealers and technicians offer around-the-clock support, including machine monitoring and world-class parts availability. It's the basis of everything offered by Volvo Services, so you can be confident we've got you covered right from the start.

BUILDING TOMORROW

35% more productivity

Delivering the type of durability and performance more commonly expected from a 60-tonne crawler excavator, the Volvo EC550E truly punches above its weight. Outstanding levels of power and productivity make this machine the perfect partner for mining, mass excavation and large infrastructure projects.

Dig more, lift more

Shorten cycle times in the EC550E which delivers the digging forces and lifting capacity more commonly found in a 60-tonne machine. With impressive engine power and reinforced digging equipment with large pin size, this is an excavator which is big on performance.

Heavy-duty undercarriage

Handle heavy loads in even the most challenging conditions thanks to the long, wide lower frame, and robust undercarriage, which provide superior levels of stability and durability. The high-grade 60 tonne caliber undercarriage is in a class of its own, featuring reinforced track link and pins as well as enlarged rollers and shafts.

Right-sized buckets

The EC550E is available with a range of optimum-sized heavy-duty rock buckets especially designed for use in abrasive conditions. The Volvo Tooth System makes easy work of teeth replacements thanks to its place, push and click functionality.

On-Board Weighing

Take control of your productivity and ensure you load the optimum amount of material with On-Board Weighing. The optional system provides real-time information to eliminate under and overloading of haul trucks. The system also records total tonnage for complete production management.

OPTIMAL PASS MATCHING

The Volvo EC550E Crawler Excavator will fill a Volvo 35-40T Articulated Hauler in just 4 to 6 buckets. The result is optimum pass-matching which delivers high-levels of production at a low cost per tonne.

Lower your cost per tonne

Reduce costs and boost profits with the EC550E. Features including the new electro-hydraulic system with Independent Metering Valve Technology, complemented by a suite of Volvo Services, all contribute towards the unrivalled levels of efficiency.

Unique Independent Metering Valve Technology

The latest pioneering innovation from Volvo, the next generation electro-hydraulic system with Independent Metering Valve Technology (IMVT) is the most high-performing hydraulic system in the industry. It provides significantly more precise control on the hydraulic system compared to a conventional system, contributing towards unrivalled levels of controllability and efficiency.

Get the most from your machine

While reliable and efficient machines of course play a vital role in reducing costs, enhancing safety and maximizing productivity, it is ultimately the performance of the operator that really makes the difference. We offer a wide range of training initiatives to help operators unlock the full capability of their Volvo excavator.

Connected to efficiency

Fuel is the industry's number one operational cost and Fuel Efficiency Reports help to identify areas where efficiency improvements can be made. If you need further support putting insight into action, your Volvo dealer is on hand to help you develop a plan to deliver long-term efficiency gains.

Optimize site efficiency

Using Volvo Site Simulation, your Volvo dealer can help you optimize site productivity and lower your total cost of ownership. Get recommendations on the best fleet configuration and site set-up to maximize efficiency and profitability.

22% MORE FUEL EFFICIENCY

Take fuel efficiency to the next level thanks to the next generation electro-hydraulic system with Independent Metering Valve Technology and optimization of the motor/hydraulic pump combination, which lowers engine rpm while optimizing power. The result is a fuel efficiency improvement of up to 22%.

For your comfort and safety

Welcome to the ultimate in operator convenience. Whether working inside or on the machine you can be sure of the highest levels comfort and safety in every design detail of the EC550E, with features such as unrivalled visibility, reduced bouncing, motion priority functions and easy access to service points.

See it all

Operators benefit from outstanding visibility thanks to rear and side-view cameras. Furthermore, the optional Volvo Smart View uses front, rear and side cameras to provide a real-time, overhead view of the machine, resulting in safer machine rotation while working, especially in confined spaces.

Adapt to the job

Operators can easily select and adjust a number of functions depending on personal preferences and the task at hand, including Boom/Swing and Boom/Travel priority which enables prioritization of one function over another. Operators can also easily adjust the boom down speed, ideal for precision tasks which require optimum control.

A smoother shift

Boom and arm bouncing reduction technology dramatically reduces machine shock, resulting in a more comfortable and productive operator performance.

Straightforward servicing

Grouped filters accessible from the ground level make servicing quick and easy, while the 3-point right-hand access ensures the upper structure can be accessed with confidence when needed. Industry renowned features such as bolted anti-slip plates, high visibility guardrails and handrails and large walkways further ensure the highest levels of safety when servicing the machine.

INDUSTRY-RENOWNED CAB

Step inside the best cab on the market. The ROPS cab exceeds industry standards for this class of machine, and with low noise and low vibration, operators will experience the ultimate in comfort. Already boasting best-in-class visibility, the optional high visibility cab and one-piece front window enhance visibility even more.

Work harder for longer

Machine features such as a high-performance fuel filtration system, engine protection and telematics connection, combined with the back-up and support of your Volvo dealer, mean that you can count on the EC550E to be available when you need it.

High-performance filtration

The EC550E can be fitted with a high-performance fuel filtration system which delivers 99.7% water separation efficiency consistently over the full service life.

Engine protection

Keep your turbocharger working in top condition for longer with the optional delayed engine shutdown. To avoid overheating, the intelligent function turns the machine off when the turbo charger has cooled down to the appropriate temperature – and can be set to activate automatically by the operator.

Keeping you moving

Maintain productivity and machine uptime with our range of widely available, tested and approved Genuine Volvo Parts – all backed by Volvo warranty. Your Volvo dealer can help you stay on track, offering flexible maintenance and repair options, as well as planned servicing, to extend the life of your excavator.

MACHINE MONITORING MADE EASY

Maximize machine uptime and reduce repair costs with the CareTrack telematic system. Choose to keep track of your machine yourself or let us take care of it with ActiveCare. Our Volvo Uptime Center will provide 24/7 machine monitoring, supplying weekly reports and notifying you should preventive maintenance action be required.

Move more for less

Big on efficiency

- +22% fuel efficiency thanks to the electro-hydraulic system with Independent Metering Valve Technology and optimization of the motor/hydraulic pump combination
- Operator training: unlock the full capability of your Volvo machine
- Fuel Efficiency Report
- Volvo Site Simulation: optimize site efficiency

Ultimate control and comfort

- Boom/Swing and Boom/Travel priority
- Adjustable boom down speed
- Boom and arm bouncing reduction
- ROPS cab: spacious, ergonomic and low-noise
- Rear and side cameras, Optional Volvo Smart View
- High-visibility cab, One-piece front window (Option)

Get around safely

- Bolted anti-slip plates
- Large walkways
- High visibility handrails and guardrails
- 3-point right-hand side access to the upper structure
- Grouped filters, accessed from ground-level or side walkway

Work harder for longer

- Delayed engine shutdown (Option)
- High performance fuel filtration system (Option)
- CareTrack telematics system
- ActiveCare: 24/7 machine monitoring, weekly reports
- Genuine Volvo Parts

35% more productivity

- Optimal match to 35-40t Volvo Articulated Haulers
- Optimum-sized heavy-duty rock buckets – complete with easily replaced teeth
- Digging forces and lifting capacity commonly found in a 60-tonne machine
- 60t-calibre, large-size undercarriage: superior stability and durability
- On-Board Weighing system (Option)

Volvo EC550E in detail

Engine

The Volvo diesel engine uses Volvo Advanced Combustion Technology (V-ACT) to deliver lower emissions, superior performance and fuel efficiency. The engine uses precise, highpressure fuel injectors, turbo charger and intercooler, and electronic engine controls to optimize machine performance.
Air Filter: 3-stage and precleaner
Automatic Idling System: Reduces engine speed to idle when the levers and pedals are not activated resulting in less fuel consumption and low cab noise levels.

Engine	Volvo	D13E
Max power at	r/min	1 600
Net, ISO 9249/SAE J1349	kW	319
	hp	434
Gross, ISO 14396/SAE J1995	kW	320
	hp	435
Max torque	Nm	2 071
at engine speed	r/min	1 350
No. of cylinders		6
Displacement	l	12.8
Bore	mm	131
Stroke	mm	158

Electrical System

High-capacity electrical system that is well protected. Waterproof double-lock harness plugs are used to secure corrosion-free connections. The main relays and solenoid valves are shielded to prevent damage. The master switch is standard.

Voltage	V	24
Batteries	V	2 x 12
Battery capacity	Ah	200
Alternator	V/A	28/80

Undercarriage

The undercarriage has a robust X-shaped frame. Greased and sealed track chains are standard.

Track shoes		51
Link pitch	mm	229
Shoe width, triple grouser	mm	600 / 750 / 900
Shoe width, double grouser	mm	600
Bottom rollers		18
Top rollers		6

Cab

The operator's cab has easy access via a wide door opening. The cab is supported on hydraulic dampening mounts to reduce shock and vibration levels. These along with sound absorbing lining provide low noise levels. The cab has excellent all-round visibility. The front windshield can easily slide up into the ceiling, and the lower front glass can be removed and stored in the side door.
Integrated air-conditioning and heating system: the pressurized and filtered cab air is supplied by an automatically-controlled fan. The air is distributed throughout the cab from 14 vents.
Ergonomic operator's seat: the adjustable seat and joystick console move independently to accommodate the operator. The seat has nine different adjustments plus a seat belt for the operator's comfort and safety. Refrigerant of the type R134a is used when this machine is equipped with air conditioning. Contains fluorinated greenhouse gas R134a, Global Warming Potential 1.430 t CO_2-eq.

Swing System

The swing system uses an axial piston motors, driving a planetary gearbox for maximum torque. An automatic holding brake and anti-rebound valve are standard.

Max. slew speed	r/min	9.4
Max. slew torque	kNm	197

Travel System

Each track is powered by an automatic two-speed shift travel motor. The track brakes are multi-disc, spring-applied and hydraulic released. The travel motor, brake and planetary gears are well protected within the track frame.

Max. drawbar pull	kN	350
Max. travel speed (low)	km/h	3.5
Max. travel speed (high)	km/h	5.4
Gradeability	°	35

Sound Level

Sound level in cab according to ISO 6396

L_{pA}	dB	71
External sound level according to ISO 6395 and EU Noise Directive (2000/14/EC)		
L_{WA}	dB	107

Hydraulic System		
Main pump, Type: 2 x Variable displacement axial piston pumps		
Maximum flow	l/min	2 x 416
Pilot pump, Type: Gear pump		
Maximum flow	l/min	1 x 16
Max. pressure		
Implement	MPa	33.8 / 36.3
Travel circuit	MPa	33.8
Slew circuit	MPa	27.9
Pilot circuit	MPa	3.9

Hydraulic Motors
Travel: Variable displacement axial piston motor with mechanical brake **Swing:** Fixed displacement piston motor with mechanical brake

Hydraulic Cylinders		
Boom		2
Bore x Stroke	ø x mm	175 x 1 590
Arm		1
Bore x Stroke	ø x mm	190 x 1 942
Bucket		1
Bore x Stroke	ø x mm	170 x 1 330
ME Bucket		1
Bore x Stroke	ø x mm	180 x 1 335
Service Refill		
Fuel tank	l	680
Hydraulic system, total	l	590
Hydraulic tank	l	270
Engine oil	l	55
Engine coolant	l	66
Slew reduction unit	l	2 x 6.4
Travel reduction unit	l	2 x 8

Specifications

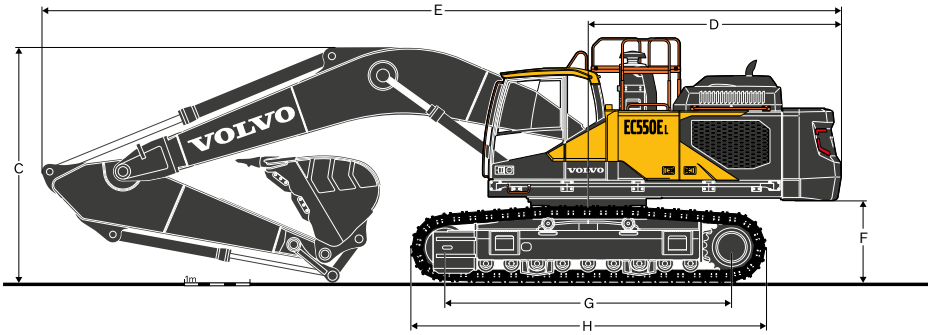

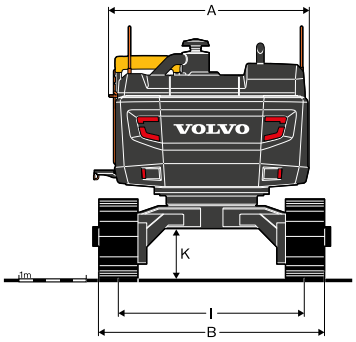

DIMENSIONS

Description	Unit	EC550EL Wide retractable undercarriage					
Boom	**m**	**6.5**		**7.0**			
Arm	**m**	**2.55**	**3.0**	**2.55**	**3.0**	**3.35**	**3.9**
A. Overall width of upper structure **	mm	2 990	2 990	2 990	2 990	2 990	2 990
B. Overall width ***							
Retracted							
600mm shoes	mm	3 400	3 400	3 400	3 400	3 400	3 400
750mm shoes	mm	3 550	3 550	3 550	3 550	3 550	3 550
900mm shoes	mm	3 700	3 700	3 700	3 700	3 700	3 700
Extended							
600mm shoes	mm	3 900	3 900	3 900	3 900	3 900	3 900
750mm shoes	mm	4 050	4 050	4 050	4 050	4 050	4 050
900mm shoes	mm	4 200	4 200	4 200	4 200	4 200	4 200
C. Overall height *							
Cab	mm	3 415	3 415	3 415	3 415	3 415	3 415
FOG	mm	3 520	3 520	3 520	3 520	3 520	3 520
Engine hood	mm	3 290	3 290	3 290	3 290	3 290	3 290
Handrail and Guardrail, folded	mm	3 385	3 385	3 385	3 385	3 385	3 385
Handrail, unfolded	mm	3 670	3 670	3 670	3 670	3 670	3 670
Guardrail, unfolded	mm	3 870	3 870	3 870	3 870	3 870	3 870
With Boom/Arm/Bucket (with hydraulic hoses)	mm	4 400	4 340	4 200	4 010	3 910	3 930
With Boom/Arm (with hydraulic hoses)	mm	4 170	4 145	4 020	3 910	3 870	3 905
With Boom (with hydraulic hoses)	mm	3 390	3 390	3 180	3 180	3 180	3 180
D. Tail swing radius	mm	3 880	3 880	3 880	3 880	3 880	3 880
E. Overall lenght							
With Boom/Arm/Bucket	mm	11 770	11 760	12 270	12 260	12 240	12 235
With Boom/Arm	mm	11 750	11 750	12 255	12 245	12 230	12 230
With Boom	mm	10 290	10 290	10 810	10 810	10 810	10 810
F. Counterweight clearance *	mm	1 370	1 370	1 370	1 370	1 370	1 370
G. Tumbler length	mm	4 515	4 515	4 515	4 515	4 515	4 515
H. Track length	mm	5 580	5 580	5 580	5 580	5 580	5 580
I. Track gauge							
Retracted	mm	2 800	2 800	2 800	2 800	2 800	2 800
Extended	mm	3 300	3 300	3 300	3 300	3 300	3 300
K. Min. ground clearance *	mm	735	735	735	735	735	735

* Without shoe grouser
** Exclude walkway, handrail
*** Shoe end to end

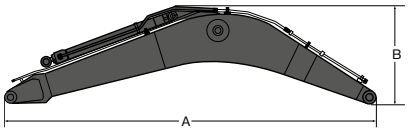

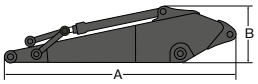

DIMENSIONS

Boom				Arm					
Description	Unit			Description	Unit				
Boom	m	6.5 ME	7.0 HD	Arm	m	2.55	3.0	3.35	3.9
A	mm	6 780	7 280	A	mm	3 805	4 270	4 620	5 170
B	mm	1 910	1 785	B	mm	1 260	1 260	1 260	1 260
Width	mm	906	906	Width	mm	605	605	605	605
Weight	kg	5 140	5 025	Weight	kg	2 710	2 920	2 875	3 030

* Includes arm cylinder, piping and pin

Superstructure with boom cylinders, weight		
Description	Unit	Superstructure
Weight	kg	13 370

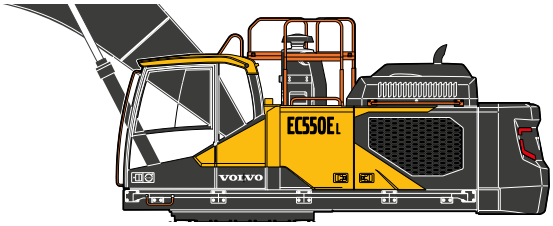

Lower structure, weight		
Description	Unit	EC550EL Wide retractable undercarriage
600mm	kg	18 930
750mm	kg	19 730
900mm	kg	20 525
600mm double	kg	18 750

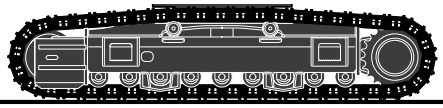

Specifications

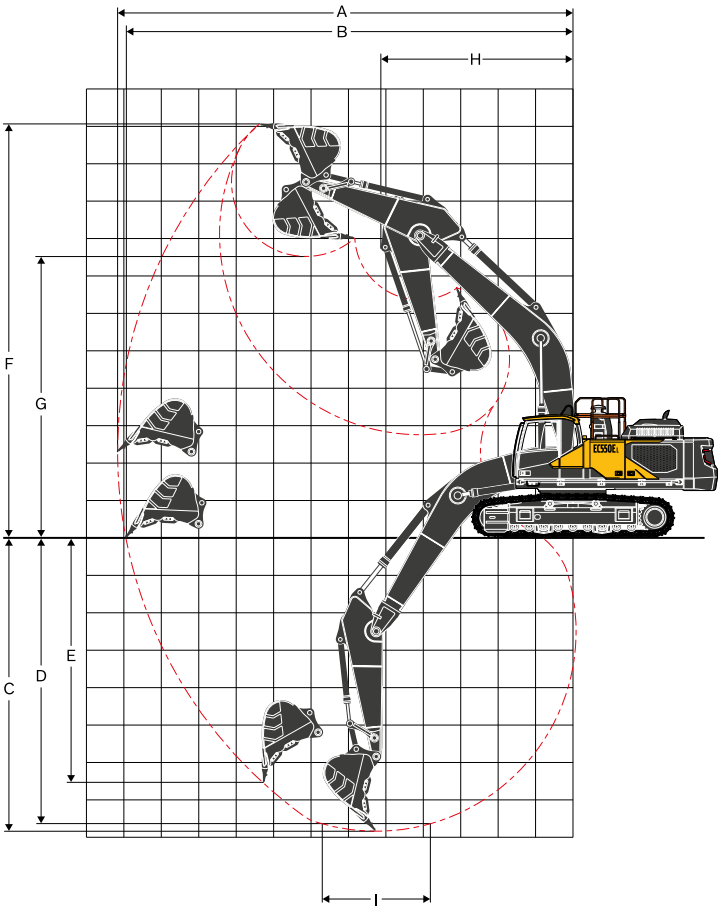

WORKING RANGE									
Description			**Unit**	**EC550EL***					
Boom			**m**	**6.5**		**7.0**			
Arm			**m**	**2.55**	**3.0**	**2.55**	**3.0**	**3.35**	**3.9**
A. Max. digging reach			mm	11 040	11 410	11 450	11 820	12 150	12 650
B. Max. digging reach on ground			mm	10 770	11 140	11 180	11 560	11 900	12 410
C. Max. digging depth			mm	6 550	7 000	6 870	7 320	7 670	8 220
D. Max. digging depth (2.44 m level)			mm	6 360	6 830	6 680	7 190	7 520	8 090
E. Max. vertical wall digging depth			mm	5 670	5 830	5 780	5 930	5 970	6 380
F. Max. cutting height			mm	10 900	10 900	11 060	11 060	11 200	11 370
G. Max. dumping height			mm	7 000	7 050	7 470	7 540	7 690	7 870
H. Min. front slew radius			mm	4 810	4 780	5 210	5 170	5 140	5 050
DIGGING FORCES WITH DIRECT FIT BUCKET									
Breakout force - bucket	Normal	SAE J1179	kN	267	267	251	251	251	251
	Power boost	SAE J1179	kN	287	287	269	269	269	269
	Normal	ISO 6015	kN	307	307	287	287	287	287
	Power boost	ISO 6015	kN	329	329	308	308	308	308
Tearout force - dipper arm	Normal	SAE J1179	kN	247	227	258	236	220	196
	Power boost	SAE J1179	kN	265	243	277	253	235	210
	Normal	ISO 6015	kN	256	233	264	241	223	199
	Power boost	ISO 6015	kN	274	250	284	258	240	213
Rotation angle, bucket			°	168	168	178	178	178	178

*Machine with pin-on bucket

MACHINE WEIGHTS AND GROUND PRESSURE

Description	Shoe width	Operating weight	Ground pressure	Overall width
	mm	kg	kPa	mm
Triple grouser	600	54 620	91.3	3 900
	750	55 410	74.1	4 050
	900	56 210	62.7	4 200
Double grouser	600	54 490	91.1	3 900

EC550EL with WIDE RETRACTABLE undercarriage,
6.5 m boom, 3.0 m arm,
3 130 kg bucket, 10 600 kg counterweight

BUCKET SELECTION GUIDE

Bucket type		Capacity	Cutting width	Weight	Teeth	EC550EL wide retractable undercarriage					
						600 mm shoe, 10 600 kg counterweight					
						6.5 m ME Boom		7.0 m HD Boom			
		L	mm	kg	EA	2.55 m	3.0 m	2.55 m	3.0 m	3.35 m	3.9 m
Direct fit Buckets	General purpose	2 840	1 940	2 554	5	C	C	C	C	C	C
		3 310	2 190	2 841	6	C	C	C	C	C	C
		3 820	2 020	2 981	6	C	C	C	C	B	B
		4 200	2 180	3 144	5	C	C	C	B	B	A
		4 600	2 340	3 363	6	C	B	B	B	A	X
	Heavy duty	2 400	1 710	2 516	5	D	D	D	D	D	D
		2 660	1 840	2 587	5	D	D	D	D	D	D
		2 840	1 940	2 682	5	D	D	D	D	D	D
		3 310	2 190	2 985	6	D	D	D	D	C	C
		3 600	1 930	2 913	5	D	D	D	C	C	B
		3 820	2 020	2 990	5	D	D	C	C	B	B

Please consult with your Volvo dealer for the proper match of buckets and attachments to suit the application.
The recommendations are given as a guide only, based on typical operation conditions.
Bucket capacity based on ISO 7451, heaped material with a 1:1 angle of repose.

Maximum materal density
D: 2 100 kg/m³
C: 1 800 kg/m³
B: 1 500 kg/m³
A: 1 200 kg/m³
X : Not recommended

PASS MATCHING

For maximum production at lowest operating cost per ton Volvo recommends that loading and hauling machines be matched to achieve optimal performance.
For typical applications EC550E can fill 35-40 ton payload Volvo Articulated Haulers with 4-6 buckets.
Configuration*
6,5m ME boom, 2,55m ME arm, 10600kg CWT

		Volvo Articulated Hauler					
	Material	A25	A30	A35	A40	A45	A60
480	Mix earth/soil	5	6	7	8	8	11
550	Mix earth/soil	4	4	5	6	6	8
750	Mix earth/soil	3	3	4	5	5	6
480	Blast rock	5	6	7	8	9	12
550	Blast rock	4	5	6	6	7	9
750	Blast rock	3	4	5	5	5	7
480	Ore	5	6	7	8	8	11
550	Ore	3	4	5	5	6	7
750	Ore	3	3	4	4	5	6

* Indicated pass match reflect configuration, application and density shown. Job specific factors may influence exact pass match. Consult your Volvo dealer for more information.

Well matched, 4-6 buckets
Excavator under capacity, 7 buckets or more
Excavator over capacity, 3 buckets or less

Specifications

LIFTING CAPACITY EC550EL

Lifting capacity at the arm end without bucket.

For lifting capacity including bucket, simply subtract actual weight of the direct fit bucket or the bucket with quick coupler from the following values.

	Lifting hook related to ground level	1.5 m		3.0 m		4.5 m		6.0 m		7.5 m		9.0 m		10.5 m		Max. reach		
		Along UC	Across UC	Along UC	Across UC	Along UC	Across UC	Along UC	Across UC	Along UC	Across UC	Along UC	Across UC	Along UC	Across UC	Along UC	Across UC	m
Boom : ME 6.5 m Arm : 2.55 m Shoe : 600 mm CWT : 10 600 kg	9.0 m kg															*13 710	*13 710	6.1
	7.5 m kg															*12 460	*12 460	7.4
	6 m kg							*15 460	*15 460	*14 090	*14 090					*12 040	*12 040	8.2
	4.5 m kg					*23 390	*23 390	*17 640	*17 640	*15 010	13 780					*12 100	10 840	8.7
	3 m kg							*19 980	18 540	*16 180	13 360					*12 560	10 250	9.0
	1.5 m kg					*18 660	*18 660	*21 670	17 910	*17 140	13 000					*13 500	10 160	8.9
	0 m kg					*28 330	27 700	*22 260	17 610	*17 520	12 800					14 600	10 580	8.6
	-1.5 m kg			*21 630	*21 630	*28 310	27 850	*21 610	17 590	*16 880	12 810					*15 260	11 690	8.0
	-3 m kg			*32 180	*32 180	*25 040	*25 040	*19 280	17 860							*15 320	14 160	7.1
Boom : ME 6.5 m Arm : 3.0 m Shoe : 600 mm CWT : 10 600 kg	9.0 m kg															*11 410	*11 410	6.6
	7.5 m kg									*12 870	*12 870					*10 570	*10 570	7.8
	6 m kg									*13 210	*13 210					*10 290	*10 290	8.6
	4.5 m kg					*21 510	*21 510	*16 610	*16 610	*14 260	13 810	*11 970	10 340			*10 400	10 130	9.1
	3 m kg					*26 640	*26 640	*19 080	18 600	*15 540	13 330	*13 620	10 130			*10 850	9 590	9.3
	1.5 m kg					*25 960	*25 960	*21 030	17 860	*16 660	12 920	13 700	9 930			*11 670	9 490	9.3
	0 m kg					*30 000	27 420	*21 960	17 450	*17 270	12 660	*13 240	9 830			*13 090	9 820	9.0
	-1.5 m kg			*21 810	*21 810	*28 870	27 470	*21 720	17 350	*17 020	12 590					*14 580	10 740	8.4
	-3 m kg			*35 110	*35 110	*26 170	*26 170	*19 990	17 540	*15 060	12 820					*14 890	12 720	7.5
	-4.5 m kg					*20 920	*20 920	*15 290	*15 290							*14 610	*14 610	6.2
Boom : HD 7.0 m Arm : 2.55 m Shoe : 600 mm CWT : 10 600 kg	7.5 m kg									*13 100	*13 100					*12 630	*12 630	8.0
	6 m kg									*13 640	*13 640					*12 280	10 860	8.8
	4.5 m kg							*17 810	*17 810	*14 760	13 650	*13 250	10 320			*12 350	9 840	9.3
	3 m kg							*20 160	18 170	*16 000	13 180	*13 770	10 110			*12 790	9 350	9.5
	1.5 m kg							*21 670	17 580	*16 970	12 810	13 670	9 920			12 730	9 270	9.4
	0 m kg					*16 090	*16 090	*22 070	17 330	*17 370	12 610	13 580	9 840			13 230	9 600	9.2
	-1.5 m kg					*27 490	*27 490	*21 410	17 340	*16 940	12 590					*14 120	10 480	8.6
	-3 m kg			*30 460	*30 460	*24 710	*24 710	*19 500	17 570	*15 020	12 830					*14 180	12 330	7.7
	-4.5 m kg			*24 240	*24 240	*19 790	*19 790	*15 120	*15 120							*13 550	*13 550	6.4
Boom : HD 7.0 m Arm : 3.0 m Shoe : 600 mm CWT : 10 600 kg	7.5 m kg															*10 710	*10 710	8.4
	6 m kg									*12 850	*12 850	*12 170	10 500			*10 510	10 120	9.2
	4.5 m kg					*22 740	*22 740	*16 800	*16 800	*14 050	13 660	*12 600	10 300			*10 630	9 210	9.6
	3 m kg							*19 280	18 220	*15 390	13 150	*13 260	10 050			*11 050	8 760	9.8
	1.5 m kg							*21 070	17 510	*16 510	12 720	13 570	9 810			*11 830	8 670	9.8
	0 m kg					*19 930	*19 930	*21 810	17 150	*17 100	12 460	13 420	9 680			12 340	8 930	9.5
	-1.5 m kg			*15 900	*15 900	*28 200	27 120	*21 490	17 080	*16 960	12 380	13 440	9 700			13 390	9 670	9.0
	-3 m kg			*28 620	*28 620	*25 770	*25 770	*20 020	17 250	*15 680	12 530					*13 730	11 180	8.2
	-4.5 m kg			*27 510	*27 510	*21 530	*21 530	*16 670	*16 670							*13 570	*13 570	6.9
Boom : HD 7.0 m Arm : 3.35 m Shoe : 600 mm CWT : 10 600 kg	7.5 m kg													*9 400	*9 400	*9 400	*9 400	8.8
	6 m kg											*11 710	10 640	*9 230	*9 230	*9 230	*9 230	9.5
	4.5 m kg							*16 180	*16 180	*13 650	*13 650	*12 270	10 410	*9 320	8 800	*9 320	8 800	10.0
	3 m kg					*22 850	*22 850	*18 780	18 470	*15 070	13 290	*13 020	10 140	*9 670	8 390	*9 670	8 390	10.2
	1.5 m kg					*16 420	*16 420	*20 780	17 700	*16 310	12 830	13 630	9 880	*10 320	8 300	*10 320	8 300	10.1
	0 m kg					*20 970	*20 970	*21 780	17 270	*17 060	12 530	13 450	9 710	*11 370	8 530	*11 370	8 530	9.9
	-1.5 m kg			*15 720	*15 720	*28 880	27 150	*21 730	17 140	*17 110	12 410	13 410	9 670	12 670	9 170	12 670	9 170	9.4
	-3 m kg	*20 300	*20 300	*26 320	*26 320	*26 750	*26 750	*20 560	17 240	*16 160	12 490			*13 360	10 460	*13 360	10 460	8.6
	-4.5 m kg			*30 200	*30 200	*22 960	*22 960	*17 760	17 620					*13 390	13 150	*13 390	13 150	7.4
	-6 m kg					*15 870	*15 870							*12 290	*12 290	*12 290	*12 290	5.6
Boom : HD 7.0 m Arm : 3.9 m Shoe : 600 mm CWT : 10 600 kg	9.0 m kg															*7 930	*7 930	8.4
	7.5 m kg											*9 860	*9 860			*7 530	*7 530	9.4
	6 m kg											*10 910	10 750			*7 410	*7 410	10.1
	4.5 m kg									*12 820	*12 820	*11 590	10 480			*7 490	*7 490	10.5
	3 m kg					*24 690	*24 690	*17 710	*17 710	*14 350	13 380	*12 450	10 170	*9 520	7 990	*7 750	*7 750	10.7
	1.5 m kg					*21 740	*21 740	*20 000	17 810	*15 740	12 870	*13 270	9 870	*9 960	7 850	*8 250	7 690	10.6
	0 m kg					*22 680	*22 680	*21 370	17 260	*16 710	12 500	13 390	9 650			*9 030	7 870	10.4
	-1.5 m kg	*11 000	*11 000	*15 430	*15 430	*28 930	26 920	*21 720	17 020	*17 040	12 310	13 280	9 550			*10 270	8 380	9.9
	-3 m kg	*18 010	*18 010	*23 640	*23 640	*27 750	27 090	*21 000	17 040	*16 520	12 310	*13 060	9 620			*12 390	9 400	9.2
	-4.5 m kg	*26 130	*26 130	*33 650	*33 650	*24 650	*24 650	*18 910	17 310	*14 560	12 550					*12 890	11 410	8.1
	-6 m kg			*25 190	*25 190	*19 020	*19 020	*14 120	*14 120							*12 560	*12 560	6.4

Notes: 1. Machine in "Fine Mode-F" (Power Boost) for lifting capacities. 2. The above loads are in compliance with SAE J1097 and ISO 10567 Hydraulic Excavator Lifting Capacity Standards. 3. Rated loads do not exceed 87% of hydraulic lifting capacity or 75% of tipping load. 4. Rated loads marked with an asterisk (*) are limited by hydraulic capacity rather than tipping load.

LIFTING CAPACITY EC550EL

Lifting capacity at the arm end without bucket.

For lifting capacity including bucket, simply subtract actual weight of the direct fit bucket or the bucket with quick coupler from the following values.

	Lifting hook related to ground level	1.5 m		3.0 m		4.5 m		6.0 m		7.5 m		9.0 m		10.5 m		Max. reach		
		Along UC	Across UC	Along UC	Across UC	Along UC	Across UC	Along UC	Across UC	Along UC	Across UC	Along UC	Across UC	Along UC	Across UC	Along UC	Across UC	m
Boom : ME 6.5 m Arm : 2.55 m Shoe : 750 mm CWT : 10 600 kg	9.0 m kg											*13 710	*13 710			*13 710	*13 710	6.1
	7.5 m kg															*12 460	*12 460	7.4
	6 m kg							*15 460	*15 460	*14 090	*14 090					*12 040	*12 040	8.2
	4.5 m kg					*23 390	*23 390	*17 640	*17 640	*15 010	13 970					*12 100	10 990	8.7
	3 m kg							*19 980	18 790	*16 180	13 540					*12 560	10 390	9.0
	1.5 m kg					*18 660	*18 660	*21 670	18 160	*17 140	13 180					*13 500	10 310	8.9
	0 m kg					*28 330	28 090	*22 260	17 850	*17 520	12 980					14 810	10 730	8.6
	-1.5 m kg			*21 630	*21 630	*28 310	28 240	*21 610	17 840	*16 880	12 990					*15 260	11 860	8.0
	-3 m kg			*32 180	*32 180	*25 040	*25 040	*19 280	18 110							*15 320	14 360	7.1
Boom : ME 6.5 m Arm : 3.0 m Shoe : 750 mm CWT : 10 600 kg	9.0 m kg															*11 410	*11 410	6.6
	7.5 m kg									*12 870	*12 870					*10 570	*10 570	7.8
	6 m kg									*13 210	*13 210					*10 290	*10 290	8.6
	4.5 m kg					*21 510	*21 510	*16 610	*16 610	*14 260	14 000	*11 970	10 480			*10 400	10 280	9.1
	3 m kg					*26 640	*26 640	*19 080	18 850	*15 540	13 520	*13 620	10 280			*10 850	9 730	9.3
	1.5 m kg					*25 960	*25 960	*21 030	18 110	*16 660	13 100	13 900	10 080			*11 670	9 630	9.3
	0 m kg					*30 000	27 800	*21 960	17 700	*17 270	12 840	*13 240	9 980			*13 090	9 970	9.0
	-1.5 m kg			*21 810	*21 810	*28 870	27 850	*21 720	17 600	*17 020	12 780					*14 580	10 900	8.4
	-3 m kg			*35 110	*35 110	*26 170	*26 170	*19 990	17 790	*15 060	13 000					*14 890	12 900	7.5
	-4.5 m kg					*20 920	*20 920	*15 290	*15 290							*14 610	*14 610	6.2
Boom : HD 7.0 m Arm : 2.55 m Shoe : 750 mm CWT : 10 600 kg	7.5 m kg									*13 100	*13 100					*12 630	*12 630	8.0
	6 m kg									*13 640	*13 640					*12 280	11 010	8.8
	4.5 m kg							*17 810	*17 810	*14 760	13 830	*13 250	10 460			*12 350	9 980	9.3
	3 m kg							*20 160	18 420	*16 000	13 360	*13 770	10 250			*12 790	9 480	9.5
	1.5 m kg							*21 670	17 830	*16 970	13 000	13 870	10 070			12 920	9 410	9.4
	0 m kg					*16 090	*16 090	*22 070	17 580	*17 370	12 790	13 780	9 980			13 430	9 740	9.2
	-1.5 m kg					*27 490	*27 490	*21 410	17 580	*16 940	12 780					*14 120	10 640	8.6
	-3 m kg			*30 460	*30 460	*24 710	*24 710	*19 500	17 820	*15 020	13 010					*14 180	12 510	7.7
	-4.5 m kg			*24 240	*24 240	*19 790	*19 790	*15 120	*15 120							*13 550	*13 550	6.4
Boom : HD 7.0 m Arm : 3.0 m Shoe : 750 mm CWT : 10 600 kg	7.5 m kg															*10 710	*10 710	8.4
	6 m kg									*12 850	*12 850	*12 170	10 640			*10 510	10 260	9.2
	4.5 m kg					*22 740	*22 740	*16 800	*16 800	*14 050	13 850	*12 600	10 450			*10 630	9 340	9.6
	3 m kg							*19 280	18 460	*15 390	13 330	*13 260	10 190			*11 050	8 890	9.8
	1.5 m kg							*21 070	17 750	*16 510	12 910	13 770	9 960			*11 830	8 800	9.8
	0 m kg					*19 930	*19 930	*21 810	17 400	*17 100	12 640	13 620	9 820			12 530	9 070	9.5
	-1.5 m kg			*15 900	*15 900	*28 200	27 500	*21 490	17 330	*16 960	12 570	*13 550	9 840			*13 490	9 810	9.0
	-3 m kg			*28 620	*28 620	*25 770	*25 770	*20 020	17 500	*15 680	12 710					*13 730	11 340	8.2
	-4.5 m kg			*27 510	*27 510	*21 530	*21 530	*16 670	*16 670							*13 570	*13 570	6.9
Boom : HD 7.0 m Arm : 3.35 m Shoe : 750 mm CWT : 10 600 kg	7.5 m kg															*9 400	*9 400	8.8
	6 m kg											*11 710	10 780			*9 230	*9 230	9.5
	4.5 m kg							*16 180	*16 180	*13 650	*13 650	*12 270	10 560			*9 320	8 930	10.0
	3 m kg					*22 850	*22 850	*18 780	18 720	*15 070	13 470	*13 020	10 280			*9 670	8 520	10.2
	1.5 m kg					*16 420	*16 420	*20 780	17 950	*16 310	13 020	*13 700	10 030			*10 320	8 430	10.1
	0 m kg					*20 970	*20 970	*21 780	17 520	*17 060	12 720	13 650	9 850			*11 370	8 660	9.9
	-1.5 m kg			*15 720	*15 720	*28 880	27 530	*21 730	17 390	*17 110	12 600	13 610	9 820			12 860	9 310	9.4
	-3 m kg	*20 300	*20 300	*26 320	*26 320	*26 750	*26 750	*20 560	17 490	*16 160	12 680					*13 360	10 610	8.6
	-4.5 m kg			*30 200	*30 200	*22 960	*22 960	*17 760	*17 760							*13 390	13 330	7.4
	-6 m kg					*15 870	*15 870									*12 290	*12 290	5.6
Boom : HD 7.0 m Arm : 3.9 m Shoe : 750 mm CWT : 10 600 kg	9.0 m kg															*7 930	*7 930	8.4
	7.5 m kg											*9 860	*9 860			*7 530	*7 530	9.4
	6 m kg											*10 910	10 890			*7 410	*7 410	10.1
	4.5 m kg									*12 820	*12 820	*11 590	10 630			*7 490	*7 490	10.5
	3 m kg					*24 690	*24 690	*17 710	*17 710	*14 350	13 560	*12 450	10 310	*9 520	8 110	*7 750	*7 750	10.7
	1.5 m kg					*21 740	*21 740	*20 000	18 060	*15 740	13 050	*13 270	10 010	*9 960	7 970	*8 250	7 810	10.6
	0 m kg					*22 680	*22 680	*21 370	17 510	*16 710	12 680	13 590	9 790			*9 030	7 990	10.4
	-1.5 m kg	*11 000	*11 000	*15 430	*15 430	*28 930	27 300	*21 720	17 270	*17 040	12 500	13 480	9 690			*10 270	8 510	9.9
	-3 m kg	*18 010	*18 010	*23 640	*23 640	*27 750	27 480	*21 000	17 290	*16 520	12 500	*13 060	9 760			*12 390	9 540	9.2
	-4.5 m kg	*26 130	*26 130	*33 650	*33 650	*24 650	*24 650	*18 910	17 560	*14 560	12 740					*12 890	11 580	8.1
	-6 m kg			*25 190	*25 190	*19 020	*19 020	*14 120	*14 120							*12 560	*12 560	6.4

Notes: 1. Machine in "Fine Mode-F" (Power Boost) for lifting capacities. 2. The above loads are in compliance with SAE J1097 and ISO 10567 Hydraulic Excavator Lifting Capacity Standards. 3. Rated loads do not exceed 87% of hydraulic lifting capacity or 75% of tipping load. 4. Rated loads marked with an asterisk (*) are limited by hydraulic capacity rather than tipping load.

Specifications

LIFTING CAPACITY EC550EL

Lifting capacity at the arm end without bucket.

For lifting capacity including bucket, simply subtract actual weight of the direct fit bucket or the bucket with quick coupler from the following values.

	Lifting hook related to ground level	1.5 m		3.0 m		4.5 m		6.0 m		7.5 m		9.0 m		10.5 m		Max. reach		
		Along UC	Across UC	Along UC	Across UC	Along UC	Across UC	Along UC	Across UC	Along UC	Across UC	Along UC	Across UC	Along UC	Across UC	Along UC	Across UC	m
Boom : ME 6.5 m Arm : 2.55 m Shoe : 900 mm CWT : 10 600 kg	9.0 m kg															*13 710	*13 710	6.1
	7.5 m kg															*12 460	*12 460	7.4
	6 m kg							*15 460	*15 460	*14 090	*14 090					*12 040	*12 040	8.2
	4.5 m kg					*23 390	*23 390	*17 640	*17 640	*15 010	14 150					*12 100	11 140	8.7
	3 m kg							*19 980	19 040	*16 180	13 720					*12 560	10 540	9.0
	1.5 m kg					*18 660	*18 660	*21 670	18 410	*17 140	13 370					*13 500	10 450	8.9
	0 m kg					*28 330	*28 330	*22 260	18 100	*17 520	13 170					*14 930	10 880	8.6
	-1.5 m kg			*21 630	*21 630	*28 310	*28 310	*21 610	18 090	*16 880	13 170					*15 260	12 030	8.0
	-3 m kg			*32 180	*32 180	*25 040	*25 040	*19 280	18 360							*15 320	14 550	7.1
Boom : ME 6.5 m Arm : 3.0 m Shoe : 900 mm CWT : 10 600 kg	9.0 m kg															*11 410	*11 410	6.6
	7.5 m kg									*12 870	*12 870					*10 570	*10 570	7.8
	6 m kg									*13 210	*13 210					*10 290	*10 290	8.6
	4.5 m kg					*21 510	*21 510	*16 610	*16 610	*14 260	14 180	*11 970	10 630			*10 400	*10 400	9.1
	3 m kg					*26 640	*26 640	*19 080	*19 080	*15 540	13 700	*13 620	10 420			*10 850	9 870	9.3
	1.5 m kg					*25 960	*25 960	*21 030	18 350	*16 660	13 280	14 100	10 220			*11 670	9 770	9.3
	0 m kg					*30 000	28 180	*21 960	17 950	*17 270	13 020	*13 240	10 120			*13 090	10 110	9.0
	-1.5 m kg			*21 810	*21 810	*28 870	28 230	*21 720	17 850	*17 020	12 960					*14 580	11 060	8.4
	-3 m kg			*35 110	*35 110	*26 170	*26 170	*19 990	18 030	*15 060	13 180					*14 890	13 080	7.5
	-4.5 m kg					*20 920	*20 920	*15 290	*15 290							*14 610	*14 610	6.2
Boom : HD 7.0 m Arm : 2.55 m Shoe : 900 mm CWT : 10 600 kg	7.5 m kg									*13 100	*13 100					*12 630	*12 630	8.0
	6 m kg									*13 640	*13 640					*12 280	11 160	8.8
	4.5 m kg							*17 810	*17 810	*14 760	14 010	*13 250	10 610			*12 350	10 120	9.3
	3 m kg							*20 160	18 670	*16 000	13 550	*13 770	10 400			*12 790	9 620	9.5
	1.5 m kg							*21 670	18 080	*16 970	13 180	14 070	10 210			13 110	9 540	9.4
	0 m kg					*16 090	*16 090	*22 070	17 830	*17 370	12 980	13 980	10 130			13 630	9 890	9.2
	-1.5 m kg					*27 490	*27 490	*21 410	17 830	*16 940	12 960					*14 120	10 790	8.6
	-3 m kg			*30 460	*30 460	*24 710	*24 710	*19 500	18 070	*15 020	13 190					*14 180	12 680	7.7
	-4.5 m kg			*24 240	*24 240	*19 790	*19 790	*15 120	*15 120							*13 550	*13 550	6.4
Boom : HD 7.0 m Arm : 3.0 m Shoe : 900 mm CWT : 10 600 kg	7.5 m kg															*10 710	*10 710	8.4
	6 m kg									*12 850	*12 850	*12 170	10 790			*10 510	10 410	9.2
	4.5 m kg					*22 740	*22 740	*16 800	*16 800	*14 050	14 030	*12 600	10 600			*10 630	9 480	9.6
	3 m kg							*19 280	18 710	*15 390	13 510	*13 260	10 340			*11 050	9 020	9.8
	1.5 m kg							*21 070	18 000	*16 510	13 090	*13 850	10 100			*11 830	8 930	9.8
	0 m kg					*19 930	*19 930	*21 810	17 650	*17 100	12 830	13 820	9 970			12 720	9 200	9.5
	-1.5 m kg			*15 900	*15 900	*28 200	27 890	*21 490	17 580	*16 960	12 750	*13 550	9 990			*13 490	9 960	9.0
	-3 m kg			*28 620	*28 620	*25 770	*25 770	*20 020	17 750	*15 680	12 890					*13 730	11 500	8.2
	-4.5 m kg			*27 510	*27 510	*21 530	*21 530	*16 670	*16 670							*13 570	*13 570	6.9
Boom : HD 7.0 m Arm : 3.35 m Shoe : 900 mm CWT : 10 600 kg	7.5 m kg															*9 400	*9 400	8.8
	6 m kg											*11 710	10 930			*9 230	*9 230	9.5
	4.5 m kg							*16 180	*16 180	*13 650	*13 650	*12 270	10 700			*9 320	9 060	10.0
	3 m kg					*22 850	*22 850	*18 780	*18 780	*15 070	13 650	*13 020	10 430			*9 670	8 640	10.2
	1.5 m kg					*16 420	*16 420	*20 780	18 190	*16 310	13 200	*13 700	10 170			*10 320	8 550	10.1
	0 m kg					*20 970	*20 970	*21 780	17 770	*17 060	12 900	13 850	10 000			*11 370	8 790	9.9
	-1.5 m kg			*15 720	*15 720	*28 880	27 910	*21 730	17 630	*17 110	12 780	13 810	9 960			13 060	9 450	9.4
	-3 m kg	*20 300	*20 300	*26 320	*26 320	*26 750	*26 750	*20 560	17 740	*16 160	12 860					*13 360	10 770	8.6
	-4.5 m kg			*30 200	*30 200	*22 960	*22 960	*17 760	*17 760							*13 390	*13 390	7.4
	-6 m kg					*15 870	*15 870									*12 290	*12 290	5.6
Boom : HD 7.0 m Arm : 3.9 m Shoe : 900 mm CWT : 10 600 kg	9.0 m kg															*7 930	*7 930	8.4
	7.5 m kg											*9 860	*9 860			*7 530	*7 530	9.4
	6 m kg											*10 910	*10 910			*7 410	*7 410	10.1
	4.5 m kg									*12 820	*12 820	*11 590	10 770			*7 490	*7 490	10.5
	3 m kg					*24 690	*24 690	*17 710	*17 710	*14 350	13 750	*12 450	10 460	*9 520	8 230	*7 750	*7 750	10.7
	1.5 m kg					*21 740	*21 740	*20 000	18 310	*15 740	13 230	*13 270	10 160	*9 960	8 090	*8 250	7 930	10.6
	0 m kg					*22 680	*22 680	*21 370	17 750	*16 710	12 870	13 800	9 940			*9 030	8 110	10.4
	-1.5 m kg	*11 000	*11 000	*15 430	*15 430	*28 930	27 680	*21 720	17 520	*17 040	12 680	13 690	9 840			*10 270	8 640	9.9
	-3 m kg	*18 010	*18 010	*23 640	*23 640	*27 750	*27 750	*21 000	17 540	*16 520	12 680	*13 060	9 910			*12 390	9 680	9.2
	-4.5 m kg	*26 130	*26 130	*33 650	*33 650	*24 650	*24 650	*18 910	17 800	*14 560	12 920					*12 890	11 750	8.1
	-6 m kg			*25 190	*25 190	*19 020	*19 020	*14 120	*14 120							*12 560	*12 560	6.4

Notes: 1. Machine in "Fine Mode-F" (Power Boost) for lifting capacities. 2. The above loads are in compliance with SAE J1097 and ISO 10567 Hydraulic Excavator Lifting Capacity Standards. 3. Rated loads do not exceed 87% of hydraulic lifting capacity or 75% of tipping load. 4. Rated loads marked with an asterisk (*) are limited by hydraulic capacity rather than tipping load.

LIFTING CAPACITY EC550EL

Lifting capacity at the arm end without bucket.

For lifting capacity including bucket, simply subtract actual weight of the direct fit bucket or the bucket with quick coupler from the following values.

	Lifting hook related to ground level	1.5 m		3.0 m		4.5 m		6.0 m		7.5 m		9.0 m		10.5 m		Max. reach		
		Along UC	Across UC	Along UC	Across UC	Along UC	Across UC	Along UC	Across UC	Along UC	Across UC	Along UC	Across UC	Along UC	Across UC	Along UC	Across UC	m
Boom : ME 6.5 m Arm : 2.55 m Shoe : 600 mm double CWT : 10 600 kg	9.0 m kg															*13 690	*13 690	6.1
	7.5 m kg															*12 460	*12 460	7.4
	6 m kg							*15 480	*15 480	*14 090	*14 090					*12 040	*12 040	8.2
	4.5 m kg					*23 440	*23 440	*17 660	*17 660	*15 020	13 740					*12 090	10 800	8.7
	3 m kg							*20 000	18 480	*16 190	13 310					*12 560	10 210	9.0
	1.5 m kg					*18 700	*18 700	*21 680	17 850	*17 150	12 960					*13 500	10 130	8.9
	0 m kg					*28 430	27 620	*22 260	17 550	*17 520	12 760					14 560	10 550	8.6
	-1.5 m kg			*21 760	*21 760	*28 290	27 770	*21 600	17 540	*16 860	12 770					*15 260	11 670	8.0
	-3 m kg			*32 140	*32 140	*25 000	*25 000	*19 250	17 810							*15 320	14 140	7.1
Boom : ME 6.5 m Arm : 3.0 m Shoe : 600 mm double CWT : 10 600 kg	9.0 m kg															*11 400	*11 400	6.6
	7.5 m kg									*12 870	*12 870					*10 560	*10 560	7.8
	6 m kg									*13 220	*13 220					*10 290	*10 290	8.6
	4.5 m kg					*21 560	*21 560	*16 630	*16 630	*14 270	13 770	*12 000	10 300			*10 410	10 100	9.1
	3 m kg					*26 670	*26 670	*19 100	18 540	*15 550	13 290	*13 630	10 100			*10 850	9 560	9.3
	1.5 m kg					*25 950	*25 950	*21 040	17 800	*16 670	12 870	13 650	9 900			*11 680	9 460	9.3
	0 m kg					*29 990	27 330	*21 970	17 390	*17 270	12 610	*13 180	9 800			*13 100	9 790	9.0
	-1.5 m kg			*21 900	*21 900	*28 860	27 380	*21 710	17 300	*17 020	12 550					*14 580	10 720	8.4
	-3 m kg			*35 070	*35 070	*26 140	*26 140	*19 970	17 490	*15 030	12 780					*14 890	12 700	7.5
	-4.5 m kg					*20 870	*20 870	*15 220	*15 220							*14 600	*14 600	6.1
Boom : HD 7.0 m Arm : 2.55 m Shoe : 600 mm double CWT : 10 600 kg	7.5 m kg									*13 100	*13 100					*12 610	*12 610	8.0
	6 m kg									*13 640	*13 640					*12 280	10 820	8.8
	4.5 m kg							*17 830	*17 830	*14 770	13 600	*13 250	10 290			*12 340	9 800	9.3
	3 m kg							*20 180	18 110	*16 010	13 140	*13 780	10 070			12 760	9 310	9.5
	1.5 m kg							*21 680	17 520	*16 980	12 770	13 620	9 890			12 690	9 240	9.4
	0 m kg					*16 190	*16 190	*22 070	17 270	*17 370	12 570	13 530	9 800			13 190	9 570	9.2
	-1.5 m kg					*27 470	*27 470	*21 400	17 280	*16 930	12 550					*14 120	10 460	8.6
	-3 m kg			*30 420	*30 420	*24 680	*24 680	*19 480	17 520	*15 000	12 790					*14 180	12 310	7.7
	-4.5 m kg			*24 180	*24 180	*19 740	*19 740	*15 060	*15 060							*13 540	*13 540	6.4
Boom : HD 7.0 m Arm : 3.0 m Shoe : 600 mm double CWT : 10 600 kg	7.5 m kg															*10 700	*10 700	8.5
	6 m kg									*12 860	*12 860	*12 170	10 470			*10 500	10 080	9.2
	4.5 m kg					*22 780	*22 780	*16 820	*16 820	*14 060	13 620	*12 610	10 270			*10 620	9 170	9.6
	3 m kg							*19 300	18 150	*15 400	13 100	*13 270	10 010			*11 050	8 720	9.8
	1.5 m kg							*21 080	17 450	*16 510	12 680	13 520	9 780			*11 830	8 640	9.8
	0 m kg					*20 010	*20 010	*21 810	17 090	*17 110	12 420	13 370	9 640			12 310	8 910	9.5
	-1.5 m kg			*15 990	*15 990	*28 190	27 030	*21 490	17 030	*16 960	12 340	13 390	9 660			13 360	9 640	9.0
	-3 m kg			*28 730	*28 730	*25 740	*25 740	*20 000	17 200	*15 660	12 490					*13 730	11 160	8.2
	-4.5 m kg			*27 450	*27 450	*21 480	*21 480	*16 630	*16 630							*13 570	*13 570	6.9
Boom : HD 7.0 m Arm : 3.35 m Shoe : 600 mm double CWT : 10 600 kg	7.5 m kg															*9 400	*9 400	8.8
	6 m kg											*11 710	10 610			*9 230	*9 230	9.5
	4.5 m kg							*16 200	*16 200	*13 660	*13 660	*12 270	10 380			*9 330	8 770	10.0
	3 m kg					*22 700	*22 700	*18 800	18 410	*15 080	13 240	*13 020	10 100			*9 690	8 360	10.2
	1.5 m kg					*16 430	*16 430	*20 790	17 640	*16 310	12 790	13 590	9 850			*10 320	8 270	10.1
	0 m kg					*21 030	*21 030	*21 790	17 210	*17 060	12 490	13 400	9 680			*11 380	8 510	9.9
	-1.5 m kg			*15 800	*15 800	*28 870	27 060	*21 730	17 080	*17 110	12 370	13 360	9 640			12 640	9 150	9.4
	-3 m kg	*20 370	*20 370	*26 410	*26 410	*26 730	*26 730	*20 540	17 190	*16 150	12 450					*13 360	10 440	8.6
	-4.5 m kg			*30 140	*30 140	*22 920	*22 920	*17 730	17 560							*13 390	13 140	7.4
	-6 m kg					*15 790	*15 790									*12 270	*12 270	5.5
Boom : HD 7.0 m Arm : 3.9 m Shoe : 600 mm double CWT : 10 600 kg	9.0 m kg															*7 920	*7 920	8.4
	7.5 m kg											*9 890	*9 890			*7 530	*7 530	9.4
	6 m kg											*10 910	10 720			*7 410	*7 410	10.1
	4.5 m kg									*12 830	*12 830	*11 600	10 450			*7 490	*7 490	10.5
	3 m kg					*24 730	*24 730	*17 730	*17 730	*14 360	13 330	*12 460	10 130	*9 530	7 960	*7 760	7 750	10.7
	1.5 m kg					*21 720	*21 720	*20 010	17 750	*15 750	12 820	*13 270	9 830	*9 950	7 820	*8 250	7 660	10.6
	0 m kg					*22 710	*22 710	*21 380	17 200	*16 710	12 460	13 350	9 610			*9 040	7 840	10.4
	-1.5 m kg	*11 050	*11 050	*15 490	*15 490	*29 000	26 830	*21 720	16 960	*17 040	12 270	13 240	9 510			*10 290	8 360	9.9
	-3 m kg	*18 070	*18 070	*23 710	*23 710	*27 730	27 010	*20 990	16 990	*16 520	12 270	*13 050	9 590			*12 420	9 380	9.2
	-4.5 m kg	*26 200	*26 200	*33 600	*33 600	*24 610	*24 610	*18 880	17 260	*14 540	12 520					*12 890	11 400	8.1
	-6 m kg			*25 100	*25 100	*18 960	*18 960	*14 060	*14 060							*12 560	*12 560	6.4

Notes: 1. Machine in "Fine Mode-F" (Power Boost) for lifting capacities. 2. The above loads are in compliance with SAE J1097 and ISO 10567 Hydraulic Excavator Lifting Capacity Standards. 3. Rated loads do not exceed 87% of hydraulic lifting capacity or 75% of tipping load. 4. Rated loads marked with an asterisk (*) are limited by hydraulic capacity rather than tipping load.

Specifications

LIFTING CAPACITY EC550EL

Lifting capacity at the arm end without bucket.

For lifting capacity including bucket, simply subtract actual weight of the direct fit bucket or the bucket with quick coupler from the following values.

	Lifting hook related to ground level	1.5 m		3.0 m		4.5 m		6.0 m		7.5 m		9.0 m		10.5 m		Max. reach		
		Along UC	Across UC	Along UC	Across UC	Along UC	Across UC	Along UC	Across UC	Along UC	Across UC	Along UC	Across UC	Along UC	Across UC	Along UC	Across UC	m
Boom : XD7.0 Arm : 2.55 m Shoe : 600 mm Triple CWT : 10 600 kg	7.5 m kg									*13 050	*13 050					*12 630	*12 630	8.0
	6 m kg									*13 580	*13 580					*12 280	10 840	8.8
	4.5 m kg							*17 730	*17 730	*14 690	13 630	*13 180	10 290			*12 350	9 810	9.3
	3 m kg							*20 060	18 130	*15 930	13 150	*13 700	10 070			12 780	9 310	9.5
	1.5 m kg							*21 560	17 520	*16 880	12 770	13 640	9 880			12 710	9 230	9.4
	0 m kg					*16 090	*16 090	*21 950	17 260	*17 280	12 560	13 540	9 790			13 200	9 560	9.2
	-1.5 m kg					*27 330	*27 330	*21 290	17 260	*16 850	12 540					*14 040	10 440	8.6
	-3 m kg			*30 240	*30 240	*24 560	*24 560	*19 380	17 500	*14 930	12 780					*14 100	12 290	7.7
	-4.5 m kg			*24 040	*24 040	*19 650	*19 650	*15 010	*15 010							*13 450	*13 450	6.4
Boom : XD7.0 Arm : 3.0 m Shoe : 600 mm Triple CWT : 10 600 kg	7.5 m kg															*10 710	*10 710	8.4
	6 m kg									*12 800	*12 800	*12 110	10 480			*10 510	10 100	9.2
	4.5 m kg					*22 650	*22 650	*16 730	*16 730	*13 990	13 650	*12 540	10 280			*10 630	9 180	9.6
	3 m kg							*19 190	18 180	*15 320	13 120	*13 200	10 020			*11 050	8 720	9.8
	1.5 m kg							*20 960	17 450	*16 420	12 680	13 540	9 780			*11 830	8 630	9.8
	0 m kg					*19 930	*19 930	*21 690	17 080	*17 010	12 410	13 390	9 630			12 310	8 890	9.5
	-1.5 m kg			*15 900	*15 900	*28 040	27 010	*21 370	17 010	*16 860	12 330	13 410	9 650			13 360	9 620	9.0
	-3 m kg			*28 620	*28 620	*25 610	*25 610	*19 900	17 180	*15 580	12 480					*13 650	11 130	8.2
	-4.5 m kg			*27 300	*27 300	*21 380	*21 380	*16 560	*16 560							*13 480	*13 480	6.9
Boom : XD7.0 Arm : 3.35 m Shoe : 600 mm Triple CWT : 10 600 kg	7.5 m kg															*9 380	*9 380	8.8
	6 m kg											*11 580	10 570			*9 200	*9 200	9.5
	4.5 m kg							*16 030	*16 030	*13 510	*13 510	*12 140	10 330			*9 300	8 720	10.0
	3 m kg					*22 840	*22 840	*18 590	18 350	*14 920	13 190	*12 880	10 040			*9 640	8 300	10.2
	1.5 m kg					*16 400	*16 400	*20 570	17 550	*16 130	12 720	13 540	9 780			*10 290	8 210	10.1
	0 m kg					*20 950	*20 950	*21 550	17 100	*16 870	12 400	13 350	9 600			*11 340	8 430	9.9
	-1.5 m kg			*15 690	*15 690	*28 580	26 890	*21 500	16 960	*16 920	12 280	13 310	9 560			12 580	9 060	9.4
	-3 m kg	*20 280	*20 280	*26 300	*26 300	*26 460	*26 460	*20 330	17 080	*15 980	12 360					*13 190	10 350	8.6
	-4.5 m kg			*29 820	*29 820	*22 690	*22 690	*17 550	17 460							*13 220	13 030	7.4
	-6 m kg					*15 630	*15 630									*12 100	*12 100	5.6

Notes: 1. Machine in “Fine Mode-F” (Power Boost) for lifting capacities. 2. The above loads are in compliance with SAE J1097 and ISO 10567 Hydraulic Excavator Lifting Capacity Standards. 3. Rated loads do not exceed 87% of hydraulic lifting capacity or 75% of tipping load. 4. Rated loads marked with an asterisk (*) are limited by hydraulic capacity rather than tipping load.

Equipment

STANDARD EQUIPMENT
Engine
Turbocharged, 4 stroke diesel engine with water cooling, direct injection and charged air cooler
Air filter with indicator
Air intake heater
Oil bath pre-cleaner
Fuel filter and combined water separator
Fuel filler pump: 50 l/min, with automatic shut-off
Delayed engine Shutdown
Alternator, 80 A
Electric / Electronic control system
Advanced mode control system
Self-diagnostic system
Machine status indication
Engine speed sensing power control
Automatic idling system
One-touch power boost
Safety stop/start function
Adjustable LCD color monitor
Master electrical disconnect switch
Engine restart prevention circuit
High-capacity LED lights:
Frame-mounted 2
Boom-mounted 2
Extra work lights, LED :
- Cab-mounted 3
- Boom-mounted 2
- Counterweight-mounted 1
Travel alarm
Flashing beacon, LED
Batteries, 2 x 12 V / 200 Ah
Start motor, 24 V / 7 kW
Frame
3-point right-hand side access
Tool storage area
Service walk way, foldable
Punched metal anti-slip plates
Undercover, heavy-duty
Full height, foldable handrail and guard rail
Undercarriage
Mechanically retractable width track gauge
Undercover, heavy-duty
Hydraulic track adjusters
Greased and sealed track link
Track Guard

STANDARD EQUIPMENT
Hydraulic System
New electro-hydraulic system with IMVT
2-pump flow bucket circuit
Swing anti-rebound valves
Multi-stage filtering system
Cylinder cushioning
Cylinder contamination seals
Automatic two-speed travel motors
Boom float function
Hydraulic oil, longlife oil 68
Automatic hydraulic oil warm-up
Cab and interior
ROPS (ISO12117-2) certified cab
Silicon oil and rubber mounts with spring
Travel pedals and hand levers
Adjustable operator seat and joystick control console
Control joysticks with 3 switches and 1 proportional
Heater & air-conditioner, automatic
Flexible antenna
Radio with MP3 & USB Jack with bluetooth
Hydraulic safety lock lever
Cab, all-weather sound suppressed, includes:
- Cup holders
- Door locks
- Tinted glass
- Floor mat
- Horn
- Large storage area
- Pull-up type front window
- Removable lower windshield
- Seat belt
- Safety glass
- Sun screens, front, roof, rear
- Rain shield
- Windshield wiper with intermittent feature
- Rear view camera
- Master key
Track shoes
600 mm with triple grousers
Digging equipment
Boom: 6.5 m ME
Arm: 2.55 m
Manual centralized lubrication
Service
Tool kit, full scale
Caretrack

Equipment

OPTIONAL EQUIPMENT
Engine
Cyclone pre-cleaner
Diesel coolant heater, 10 kW
Block heater: 120 V, 240 V
Water separator with heater
Auto engine shutdown
Reversible fan drive
Fuel tank-fast fuel fill preparation
Electric
Anti-theft system
Green light beacon
Jump start connector, NATO
Dig Assist : 2D, In-Field Design and 3D
On-Board Weighing
Volvo Smart View
Frame
Hydraulic removable counterweight
Cab entrance, foldable
Side impact protection
Undercarriage
Full track guard
Hydraulic System
Hammer & shear:
- Work tool management system
(up to 32 programmable memories)
- Hammer & shear, 1 and 2 pump flow
- Variable flow and pressure pre-setting
- Additional return filter
Slope & rotator
Grapple
Oil leak (drain) line
Boom float function
Hose rupture valve: Boom, Arm
Overload warning device
Quick coupler piping
Hydraulic oil, biodegradable 46
Hydraulic oil, longlife oil 32
Hydraulic oil, longlife oil 46

OPTIONAL EQUIPMENT
Cab and interior
Fabric seat with heater
Fabric seat with heater and air suspension
Fabric seat with heater, air suspension and 3P belt
Delux seat with multiple adjusting arm rest
Heater & air-conditioner, automatic with HEPA filter
Joystick pattern change
Comfort Driving Control
Creep travel speed
Opening top hatch
Falling object guard (FOG) :
- Frame-mounted
- Cab-mounted
Cab-mounted falling object protective structure (FOPS)
Smoker kit (ashtray and lighter)
Safety net for front window
Safety net for lower front window
Front Rain shield
Lower wiper with intermittent control
Side view camera
Anti-vandalism kit
Specific key
One piece front window
High visibility cab
Track shoes
Track shoes 600/750/900 mm with triple grousers
Track shoes 600 mm with double grousers
Digging equipment
Boom: 7.0 m
Arm: 2.55 m, 3.0m, 3.35m, 3.9 m
Linkage with lifting eye
Service
Tool kit, daily maintenance
Automatic lubrication system

SELECTION OF VOLVO OPTIONAL EQUIPMENT

Oil bath pre-cleaner

LED light packages

Reversible cooling fan

Protection packages

Custom-Built Attachments

One-piece front window

Not all products are available in all markets. Under our policy of continuous improvement, we reserve the right to change specifications and design without prior notice.
The illustrations do not necessarily show the standard version of the machine.

VOLVO

Ref. No 20060246_B / English-30 / 2022.08 / EXC / Volvo, Global Marketing